Isolatorless PA Control
Using AVX Thin Film High Directivity Couplers

1. Why is an isolator required in a mobile phone?

Mobile phones receive and transmit signals through an antenna connected to RF circuitry.

Basic GSM + 3G Radio Diagram

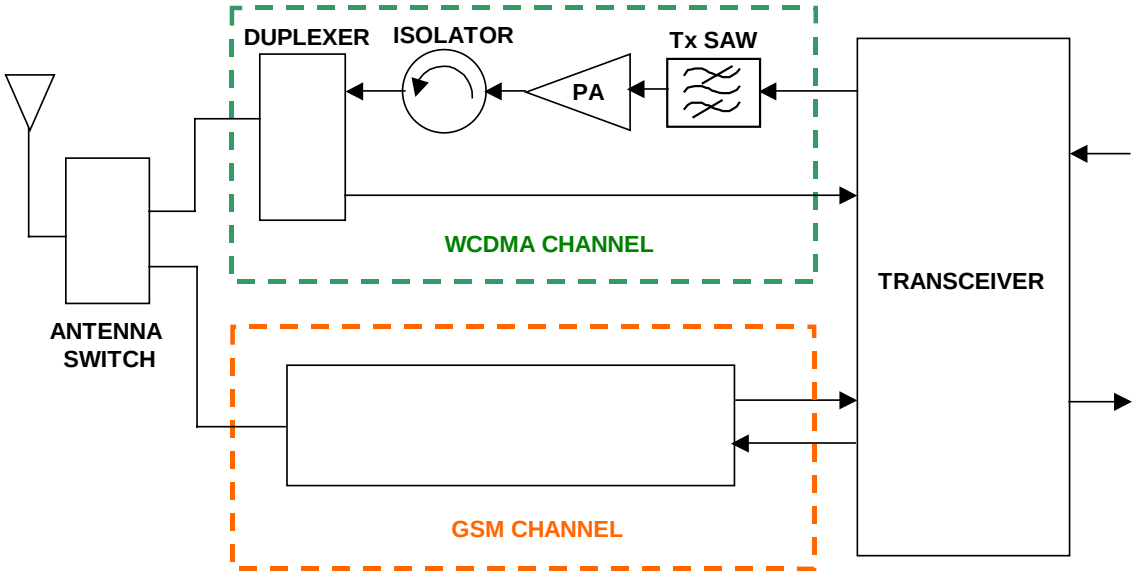

In the 3G band, WCDMA modulation results in a variable signal amplitude typically delivering a peak to average output power in excess of 3 dB, spread over a channel bandwidth of 5MHz shared amongst up to 256 users. The output power level of the mobile handset is tuned by the base station which targets to receive the uplink signals from all mobiles transmitting in the same channel at a power level within a 1dB accuracy. Failure to meet this requirement results in interrupted calls for the weakest signals hence a poor level of service perception from the users.

By contrast, the GSM band uses the TDMA standard with GMSK type signal modulation meaning that the mobile station is the only user in a given time slot and channel. This means that the impact of poor power control on the other users of the network is negligible.

2. Implementation

Mobile communication users are not supposed to be expert in antennas and wireless communication. They expect user friendly mobiles without health risks.
However the laws of physics dictate that any modification of the close environment to the antenna results in mismatch and under certain circumstances increased output power. The maximum VSWR we will consider is 6 :1, which is worst case when the antenna is not extended.
Isolators are inserted between the PA output and the antenna in order to transmit the forward signal and reject any reverse signal coming from the antenna because of mismatch. Input and output impedances are 50 Ohm. There is always a strong incentive to eliminate this component for the following reasons:

- Isolators are thick, bulky and take up valuable PCB real estate.
- Isolators are expensive.
- Isolators introduce a high Insertion Loss (typically above 0.7dB).
- Isolators are temperature sensitive.

Power coupler solutions have been developed to monitor the PA output signal in power control applications and this technique can be adapted to monitor both the transmitted power and the reflected power resulting from the antenna mismatch.
The " Vi/Vr " method consists in monitoring both the incident and the reflected power. When excessive VSWR is detected at the antenna, the output power is reduced to a value as close as possible to the target power.
Implementation of the Vi / Vr concept with standard directivity couplers (below 10dB) requires 1 coupler for each direction and results in poor performance while increasing cost and complexity.

Couplers with high directivity (above 15dB) and symmetrical performance are critical for the precision measurement of Incident and Reflected power, eliminating deviations in coupling factors and allowing the use of a single coupler.

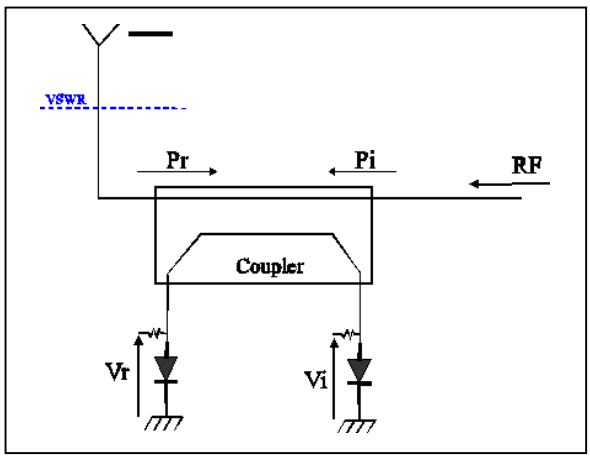

3. Description of an isolatorless PA control solution

In order to optimize the front end, improve transmit performance and reduce cost we present below our new concept for PA output control using a single, miniature AVX wideband high directivity coupler.

A single package detects both Vi and Vr allowing the measured ratio between incident and reflected power to be used for precisely controlling the output power.

In this concept Vi is detected and used to control the PA amplifier's nominal output power via the PA controller. Vr is detected and used to adjust this nominal output.

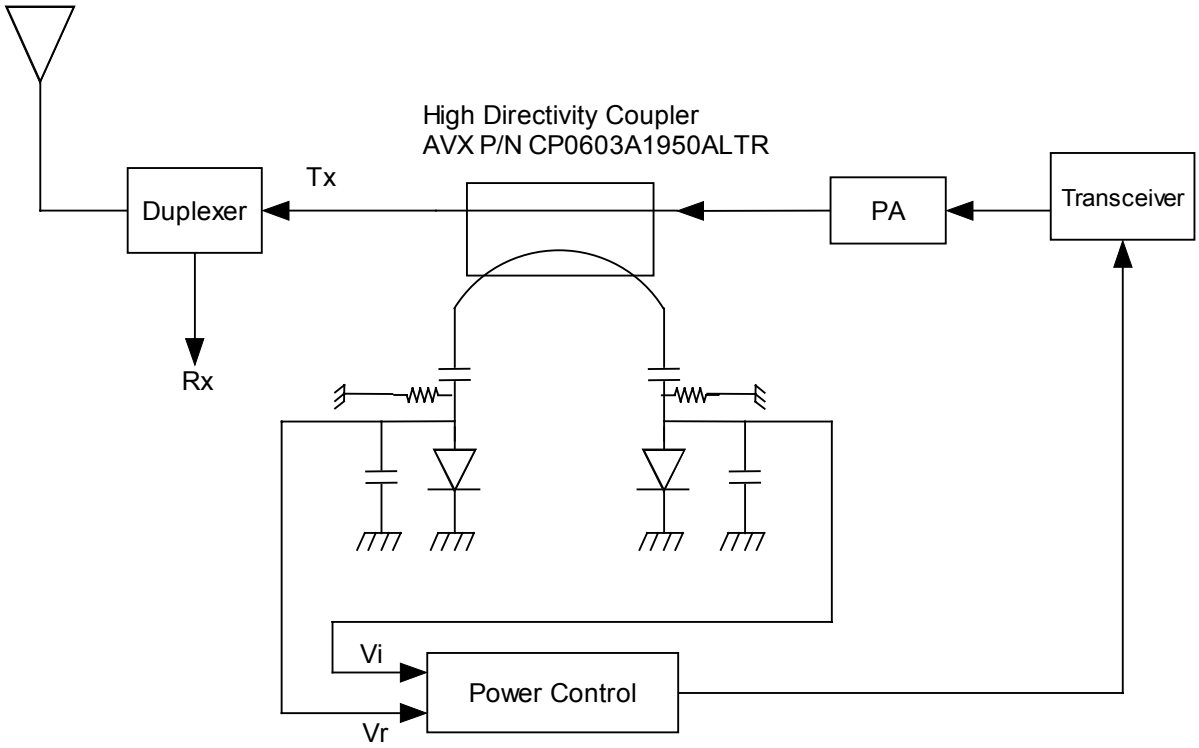

4. AVX High Directivity Couplers

The AVX High Directivity Couplers were developed to meet the stringent requirements of this application.

Several types are available with the following characteristics:

- Frequency range 800MHz to 5GHz
- Coupling factor range from 8.5dB to 27.5dB @ 1950MHz
- I.Loss of 0.25dB
- Directivity of 17 to 20dB
- Package sizes include 0402 and 0603.

5. Benefits

The following benefits are achieved when using the technique described for controlling the output power:

- Increased talk time with more accurate PA output power control.
- An isolator is no longer required, which results in cost savings, lower insertion losses between the PA and the antenna and thinner phones.
- Reduction of microwave radiation physiological effects.