ethertronics®

AN AVX® GROUP COMPANY

Application Note 004

Evaluation board, Active V1.2, using module ETH-LORA-M-AX-01 (V1.2) and Ethertronics Active Steering Multiband ISM antenna

Table of Contents

Application Note 004

Evaluation board, Active V1.2, using module ETH-LORA-M-AX-01 (V1.2) and Ethertronics Active Steering Multiband ISM antenna

ethertronics
AN AVX GROUP COMPANY

OVERVIEW

This Application Note provides hardware description for the active antenna evaluation board of Ethertronics LoRa module.

The versions of the parts are:

- Evaluation Board: EVB active antenna, V1.2.
- Module: Lora Module ETH-LORA-M-AX-01, V1.2

Instructions to setup the evaluation board are given with the full schematic and BOM.

GENERAL DESCRIPTION

The Evaluation Board (EVB) is provided with test-connector to control the Ethertronics Lora module with AT-commands and battery holder (3xAA batteries) for power supply. The EVB can also be powered through the test-connector.

PCB LAYOUT

ETHERTRONICS LORA ACTIVE EVALUATION BOARD (TOP LAYER, TOP VIEW)

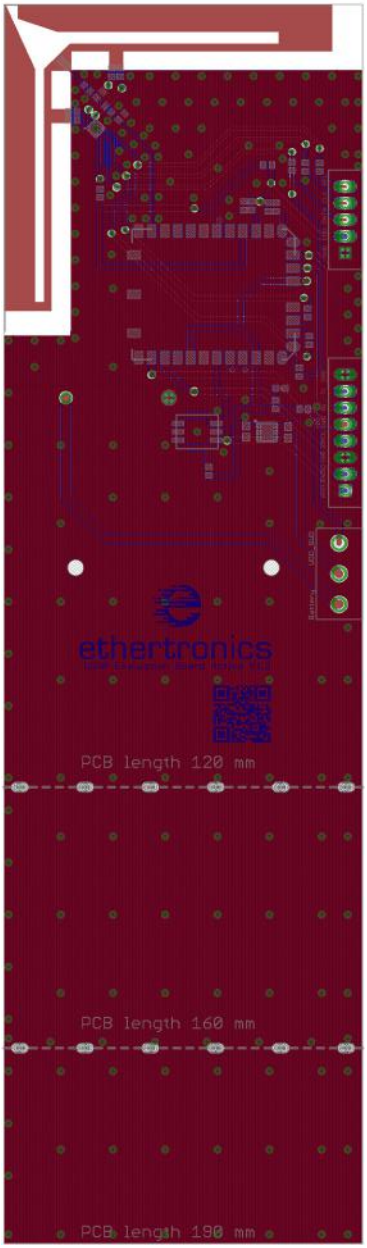

Figure 1

ETHERTRONICS LORA ACTIVE EVALUATION BOARD (BOTTOM LAYER, TOP VIEW)

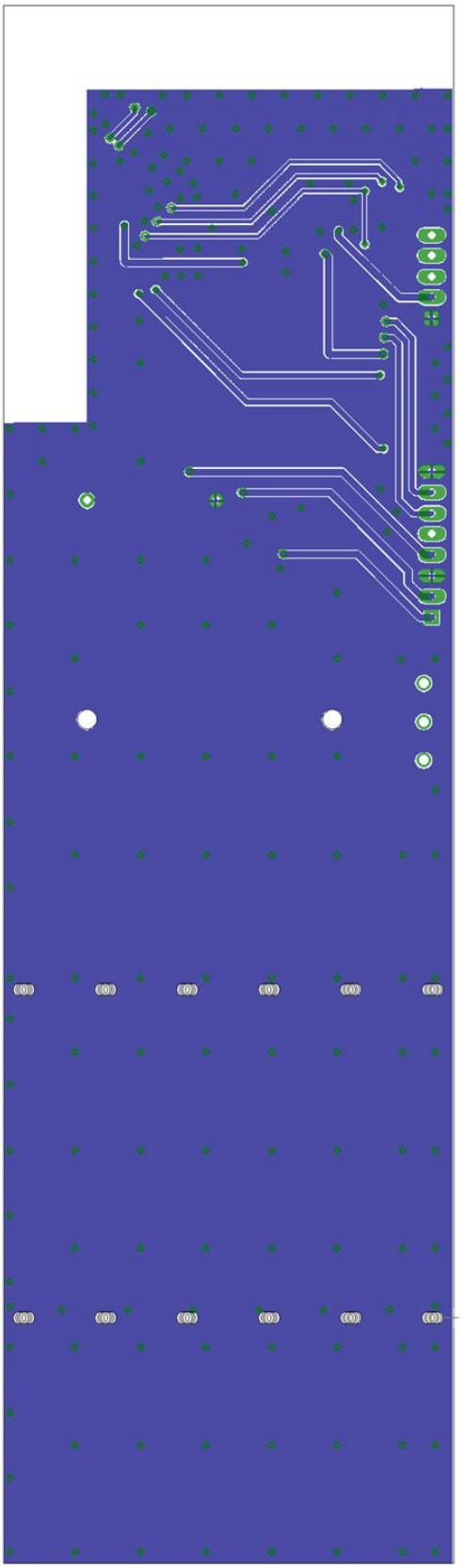

Figure 2

ETHERTRONICS LORA ACTIVE EVALUATION BOARD (LAYER 2, TOP VIEW)

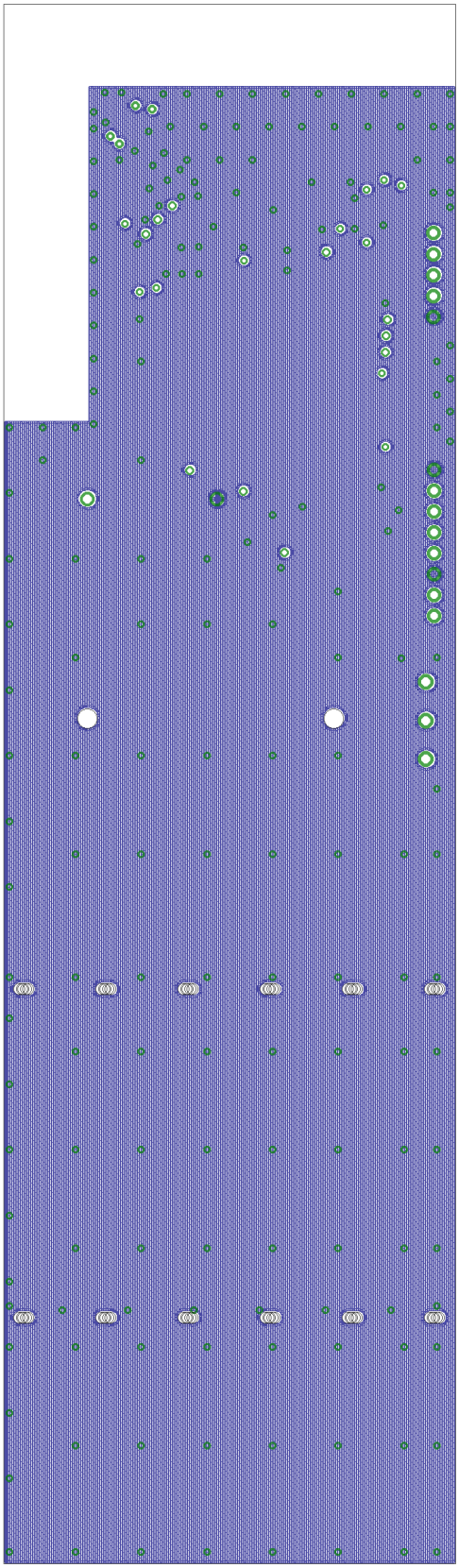

Figure 3

ETHERTRONICS LORA ACTIVE EVALUATION BOARD (LAYER 3, TOP VIEW)

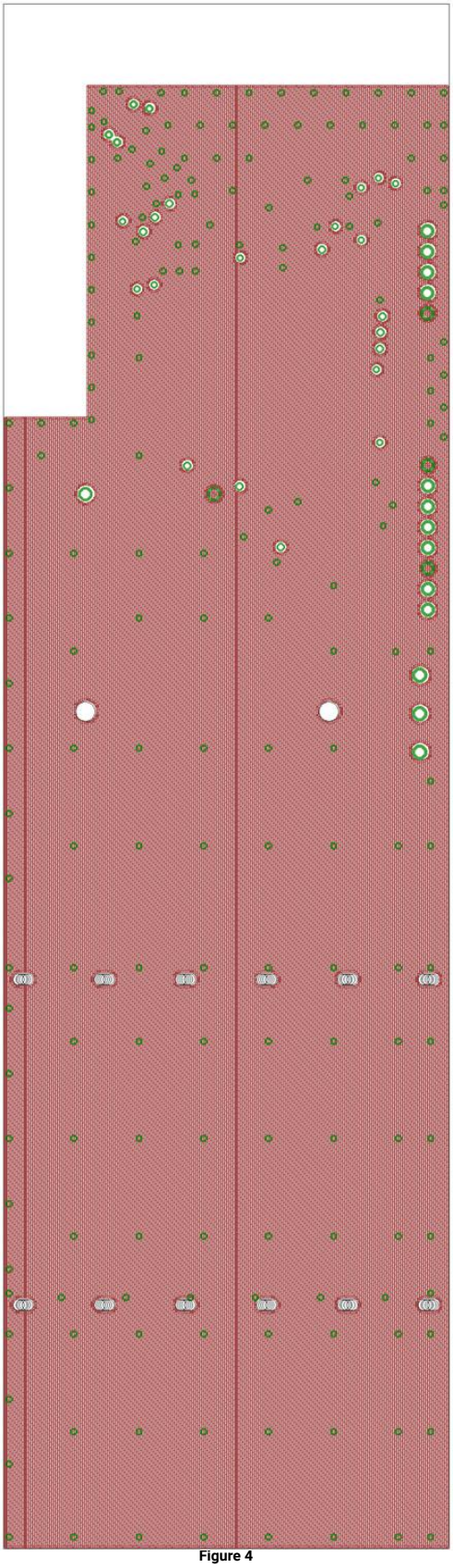

Figure 4

PCB GROUND CLEARANCE FOR ANTENNA GROUND CLEARANCE

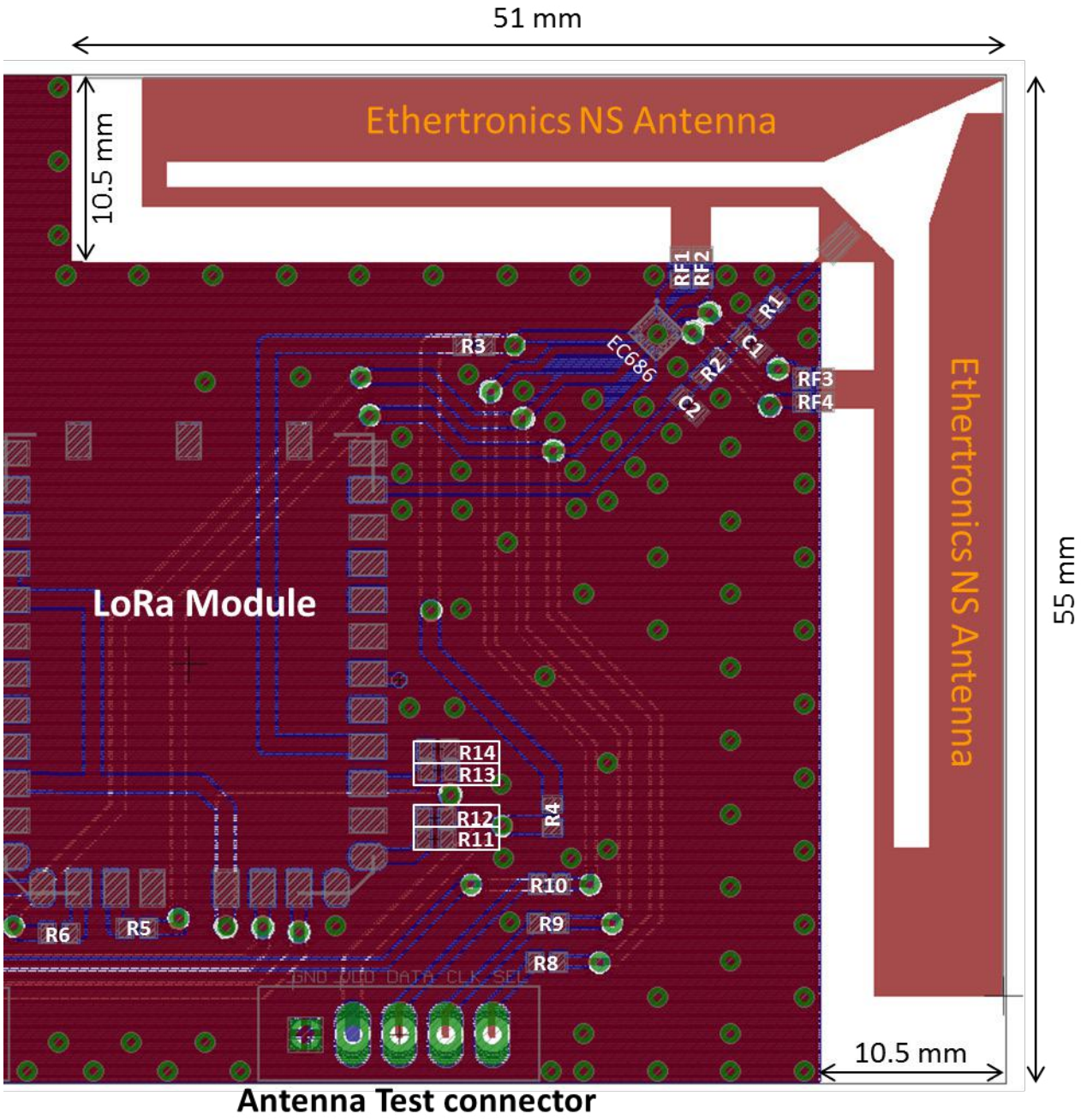

Figure 5

Any routing on any layers on the antenna ground clearance is prohibited!

ACTIVE EVALUATION BOARD PCB STACK UP AND SIZE

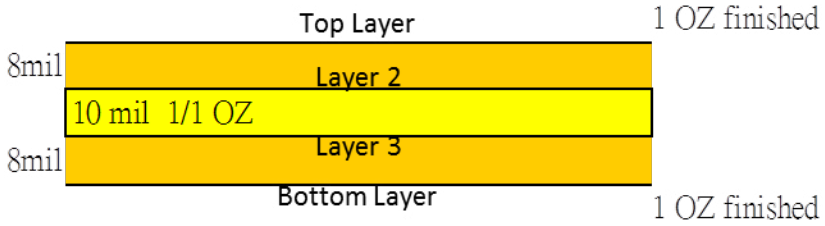

Figure 6

The Active Evaluation Board size is 190x55 mm, 4 layers, 0.8 mm thick FR4 PCB.

- The PCB has cut outs holes to help cut the board to sizes 160 mm and 120 mm.
- The Layers 2 and 3 are ground layers, no signal lines routed in evaluation board. Do not use these layers for routing under the RF line.
- No routing under antenna pattern.
- For detailed antenna pattern dimensions, please contact Ethertronics via our website

EVALUATION BOARD SCHEMATIC AND BOM

ETHERTRONICS ACTIVE LORA EVALUATION BOARD SCHEMATIC

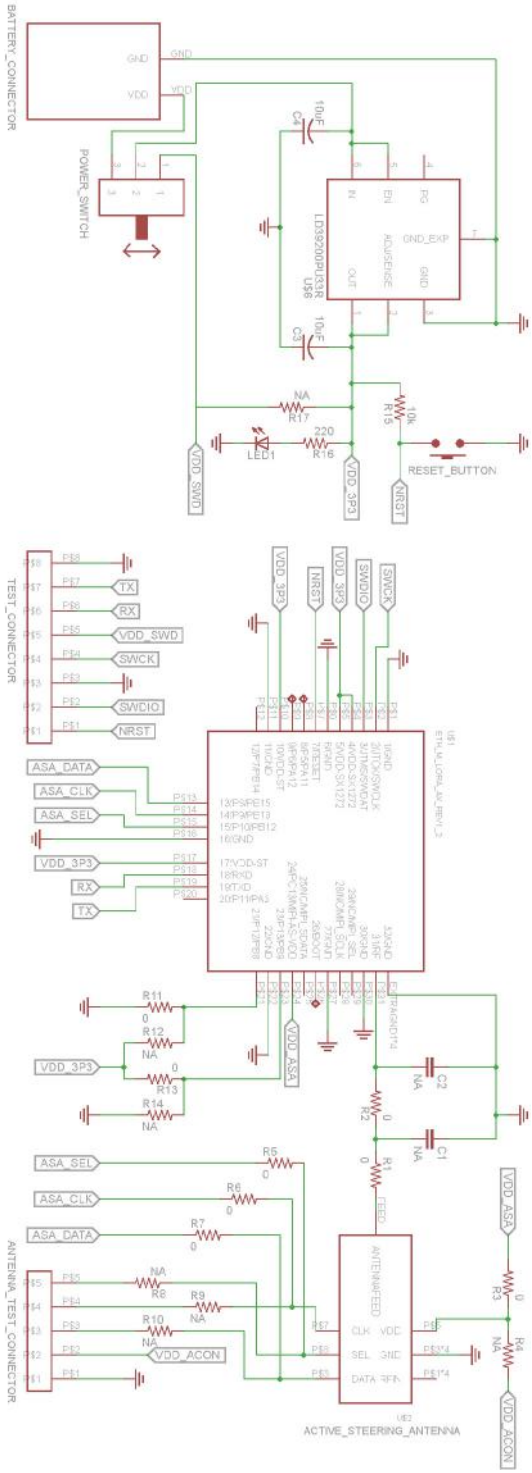

Figure 7

DETAILED SCHEMATIC OF LORA MODULE WITH ANTENNA AND TEST CONNECTORS

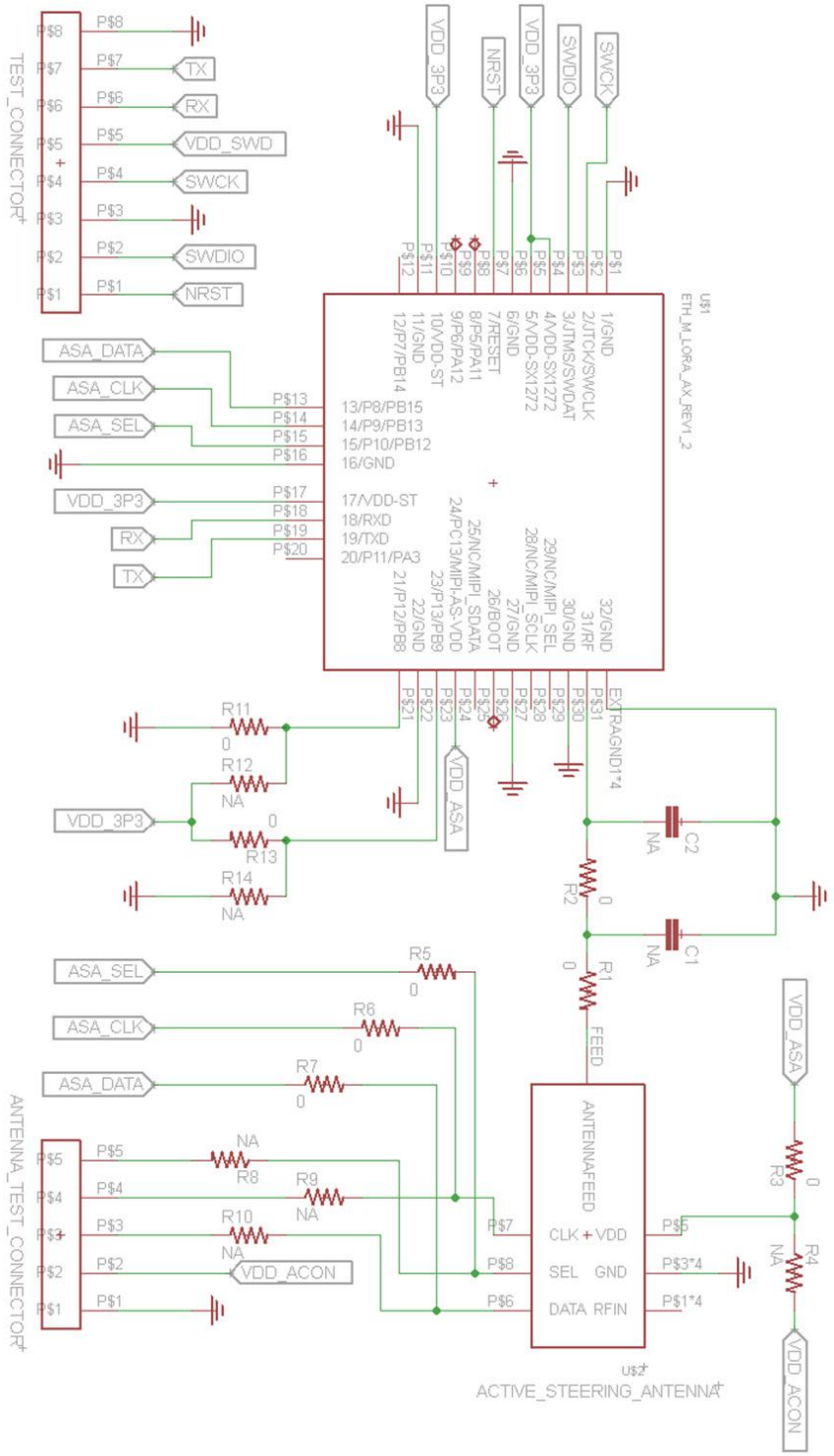

Figure 8

DETAILED SCHEMATIC OF POWER OF THE EVALUATION BOARD

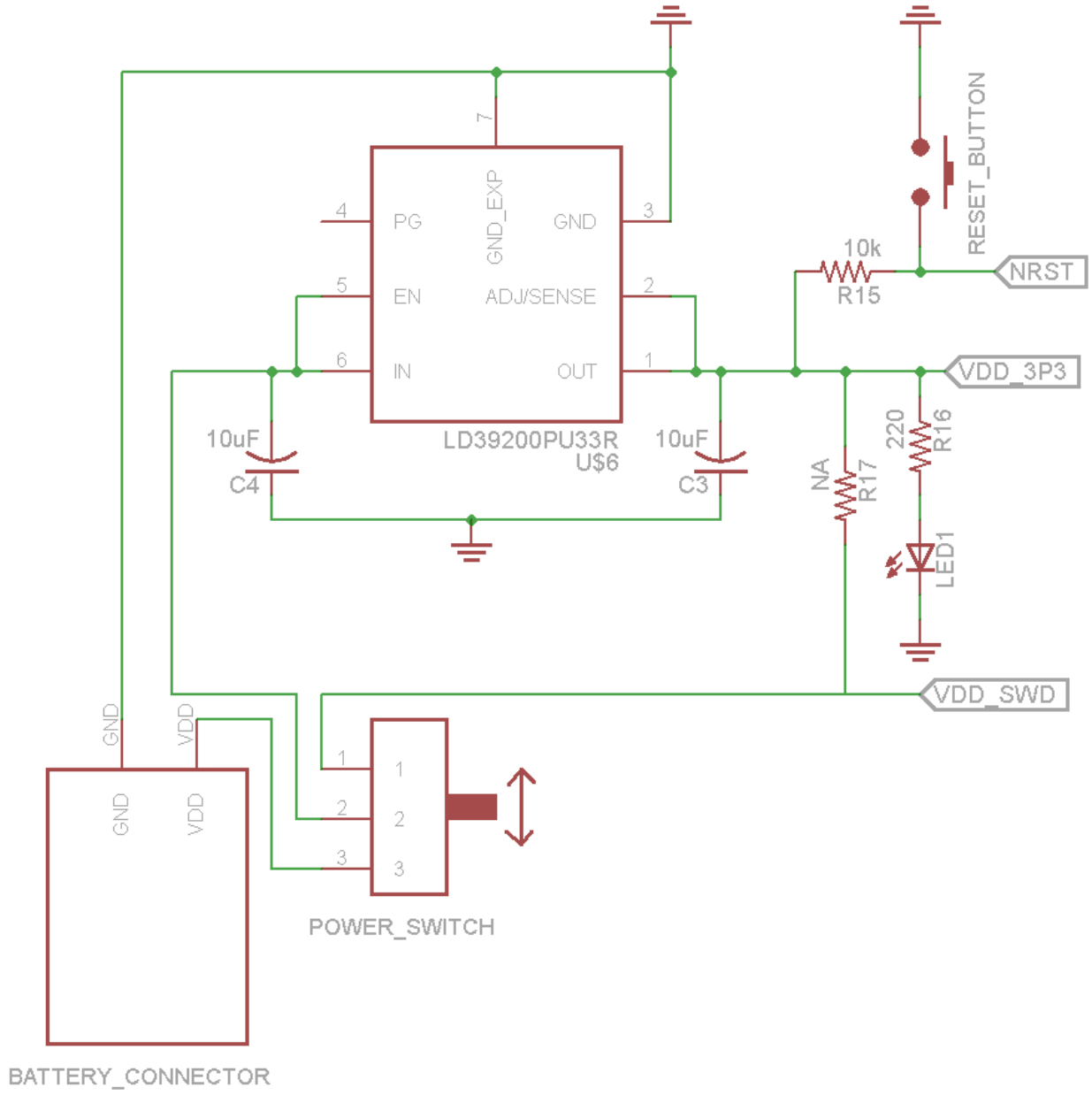

Figure 9

BOM OF EVALUATION BOARD

Schematic name	Manufacturer	Manufacture P/N	Description
C1			NA, Not Assembled
C2			NA, Not Assembled
C3	Murata	GRM188R6YA106MA73D	Capacitor 10 µF, 0603 35V
C4	Murata	GRM188R6YA106MA73D	Capacitor 10 µF, 0603 35V
LED1	Osram	LS Q976-NR-1	LED RED, 0603
R1	Panasonic	ERJ-S020R00X	Resistor 0Ω, 0402
R2	Panasonic	ERJ-S020R00X	Resistor 0Ω, 0402
R3	Panasonic	ERJ-S020R00X	Resistor 0Ω, 0402
R4			NA, Not Assembled
R5	Panasonic	ERJ-S020R00X	Resistor 0Ω, 0402
R6	Panasonic	ERJ-S020R00X	Resistor 0Ω, 0402
R7	Panasonic	ERJ-S020R00X	Resistor 0Ω, 0402
R8			NA, Not Assembled
R9			NA, Not Assembled
R10			NA, Not Assembled
R11	Panasonic	ERJ-S020R00X	Resistor 0Ω, 0402
R12			NA, Not Assembled
R13	Panasonic	ERJ-S020R00X	Resistor 0Ω, 0402
R14			NA, Not Assembled
R15	Panasonic	ERJ-2RKF1002X	Resistor 10kΩ, 0402
R16	Panasonic	ERJ-2RKF2200X	Resistor 220Ω, 0402
R17			NA, Not Assembled
U$1	Ethertronics, Inc.	ETH_M_LORA_AX_REV1_2	Ethertronics LoRa module V1.2
Test connector	Molex LCC	22-28-4080	8 Positions Header, Breakaway Connector 2.54 mm Through Hole
Antenna test connector	Molex LCC	22-28-4053	5 Positions Header, Breakaway Connector 2.54 mm Through Hole
Battery connector	Memory protection devices	BC3AAPC	Battery holder for 3xAA-batteries
U$6	ST Microelectronics	LD39200PU33R	LDO 2A, DFN6 3x3mm
Reset button	RAFI	1.14002.1010000	Push Switch SPST-NO 0.1A 35V
Power source switch	NKK Switches	CS12ANW03	Slide switch SPDT 3A 125V
RF1	Murata	LQW15AN2N7B00D	RF inductor 2.7nH, 0402
RF2	Murata	GJM1555C1H150FB01D	RF capacitor 15 pF, 0402
RF3	Murata	LQW15AN1N5B00D	RF inductor 1.5nH, 0402
RF4			NA, Not Assembled

Table 1

COMPONENT LOCATION ON EVALUATION PCB

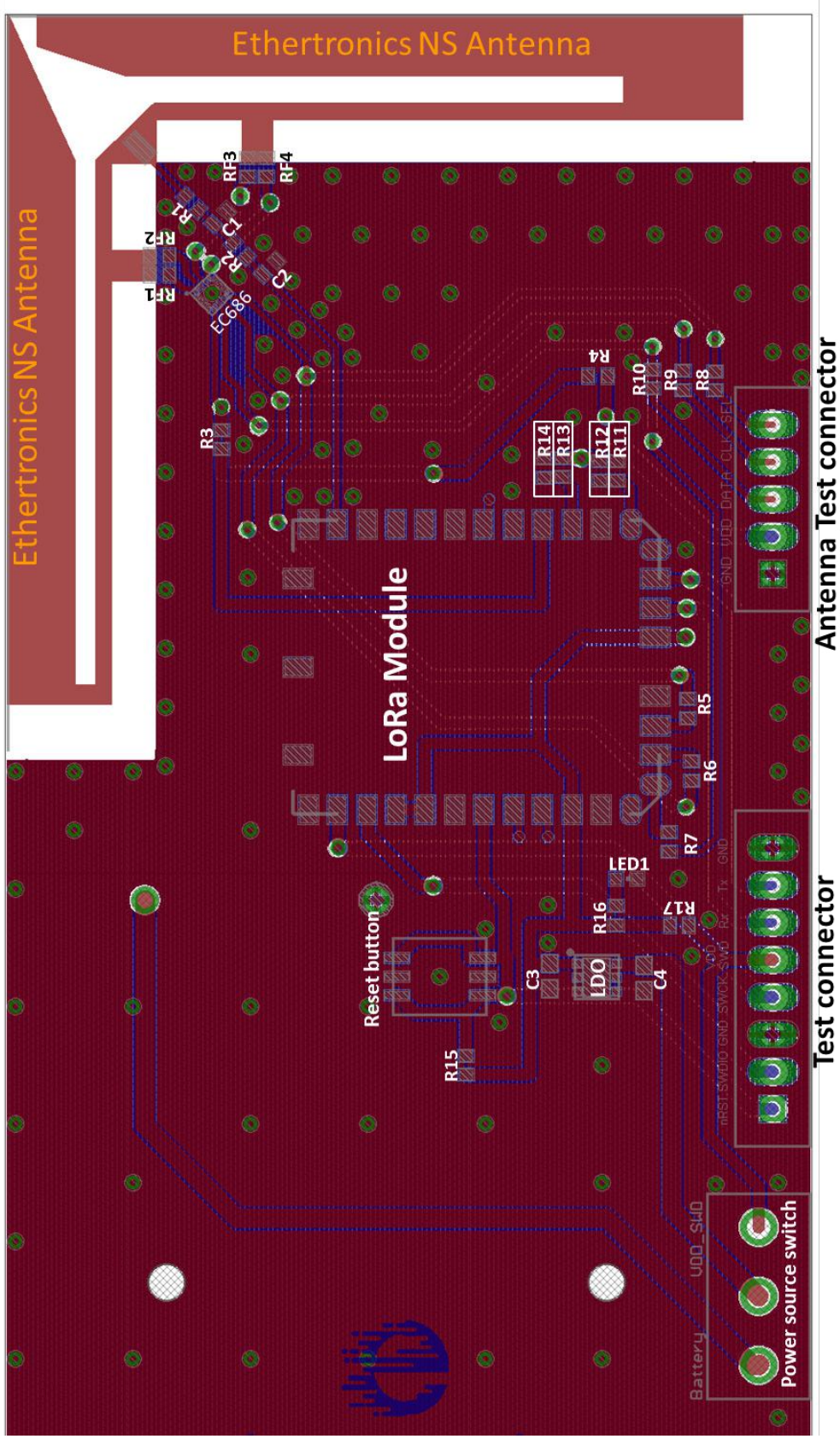

Figure 10

POWER SUPPLY

The Active LoRa evaluation board can be powered by three different ways. In below chapters all the power solutions are described. When the evaluation board is powered on, red LED light is turn on as an indicator of power.

POWER BY BATTERY

The Active LoRa Evaluation Board is provided with a battery holder for 3 AA-batteries. When powering the evaluation board with the batteries, the power selection switch is slide to position “Battery” and the evaluation board is powered through the Low Drop Out (LDO) regulator. The LDO is protecting the LoRa module from over voltage. The LDO has an output voltage of 3.3V

POWER BY TEST CONNECTOR

When powering through test connector, it is possible to route the power through the LDO or to bypass the LDO.

THROUGH LDO

The safest way to power the evaluation board by the test connector is through the LDO. To power up through LDO the power selection switch is slide to position “VDD_SWD”. The LDO will drop the input voltage by 0.3 V when providing 2 A. A minimum voltage of 3.6 V is therefore recommended before the LDO

STRAIGHT FROM THE TEST CONNECTOR

The evaluation board can be powered up also straight from the test connector without the protection of the LDO. To power up the board solder a 0 Ω resistor to the R17 pads and slide the power selection switch to position “Battery”. Be careful not to exceed 3.6 V on VDD_SWD pin. Exceeding this voltage may damage the LoRa module permanently.

ANTENNA

The Active Evaluation Board V1.1 is provided with a patented Ethertronics Active Steering Multiband ISM Antenna (ASA) design for ISM 868 MHz and 915 MHz bands. The antenna provides Ethertronics Null-Steering capability with single antenna structure for both ISM 868 MHz (EU) and ISM 915 MHz (US) bands.

CONTROLLING THE ACTIVE STEERING ANTENNA

The Active Steering Multiband ISM Antenna on the active evaluation board V1.1 can be controlled either by the AT-commands through the Ethertronics LoRa module or by using the antenna test connector on the evaluation board.

If the EC686 chipset is controlled by the LoRa module, the EC686 chipset is operating differently in ISM EU or ISM US bands, but this is handled automatically by the LoRa module.

ACTIVE STEERING ANTENNA CONTROL BY AT-COMMANDS

To control the Active Steering antenna via the AT commands (through the Lora module), the R3, R5, R6, and R7 pads must be populated with 0 Ω resistors and the R4, R8, R9, and R10 pads must be unpopulated.

For the specific AT-commands please refer to the document LoRa_Module-AT Command Reference Guide from www.avx.com/products/modules/lora-module.

ACTIVE STEERING ANTENNA CONTROL BY ANTENNA TEST CONNECTOR

The EC686 component can also be controlled by the antenna test connector using MIPI commands. In that case the R3, R5, R6, and R7 pads must be unpopulated and the R4, R8, R9, and R10 pads must be populated with 0 Ω resistors.

For the MIPI commands please refer to the Ethertronics EC686 data sheet.

ANTENNA RETURN LOSS AND TOTAL EFFICIENCY

TYPICAL RETURN LOSS AND TOTAL EFFICIENCY FOR ISM 868 MHZ. MEASURED ON 190X55 MM PCB

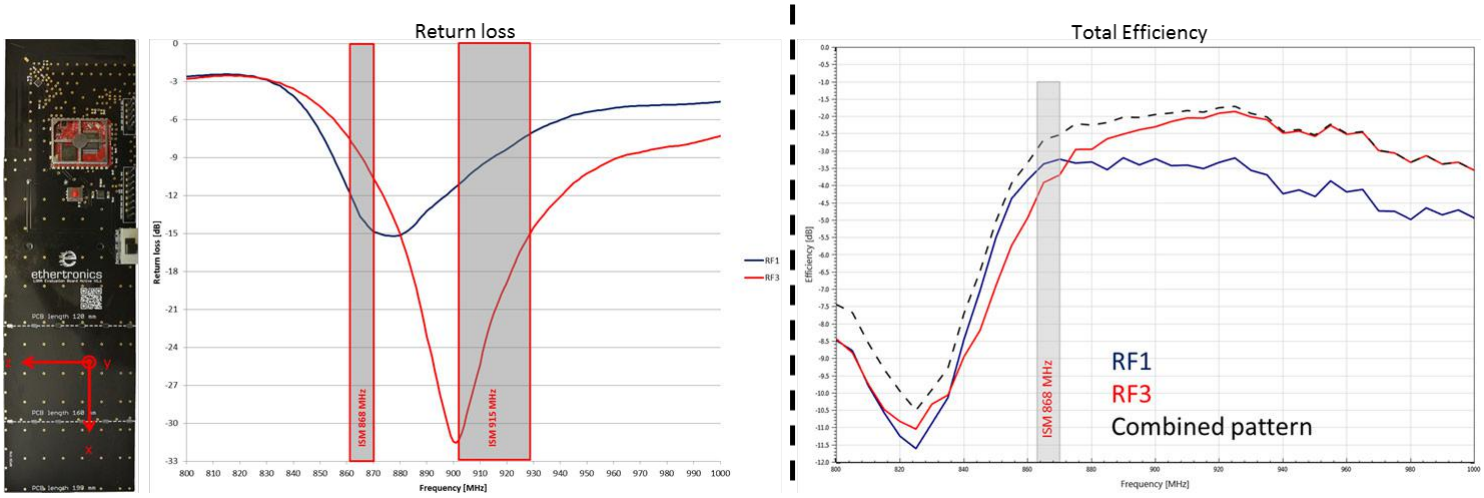

Figure 11

TYPICAL RETURN LOSS AND TOTAL EFFICIENCY FOR ISM 915 MHZ. MEASURED ON 190X55 MM PCB

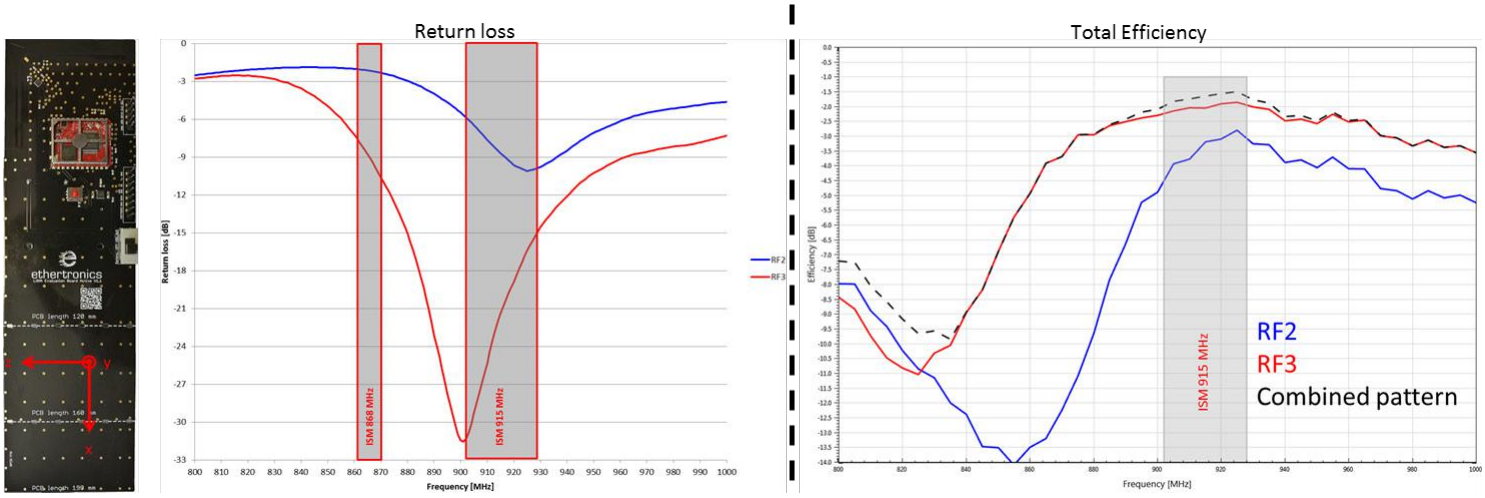

Figure 12

MATCHING CIRCUIT

There is no matching circuit for the Active Steering Antenna.

ANTENNA RADIATION PATTERNS

RADIATION PATTERNS FOR THE ISM 868 MHZ BAND AT 865 MHZ. MEASURED ON 190X55 MM PCB

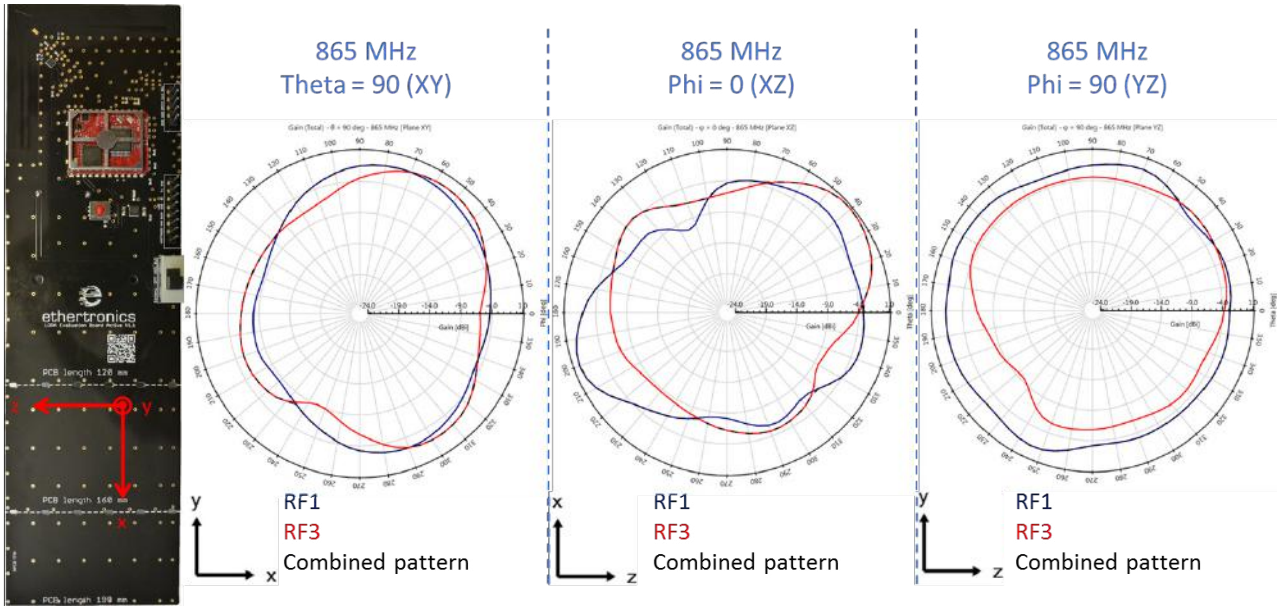

Figure 13

RADIATION PATTERNS FOR THE ISM 915 MHZ BAND AT 915 MHZ. MEASURED ON 190X55 MM PCB

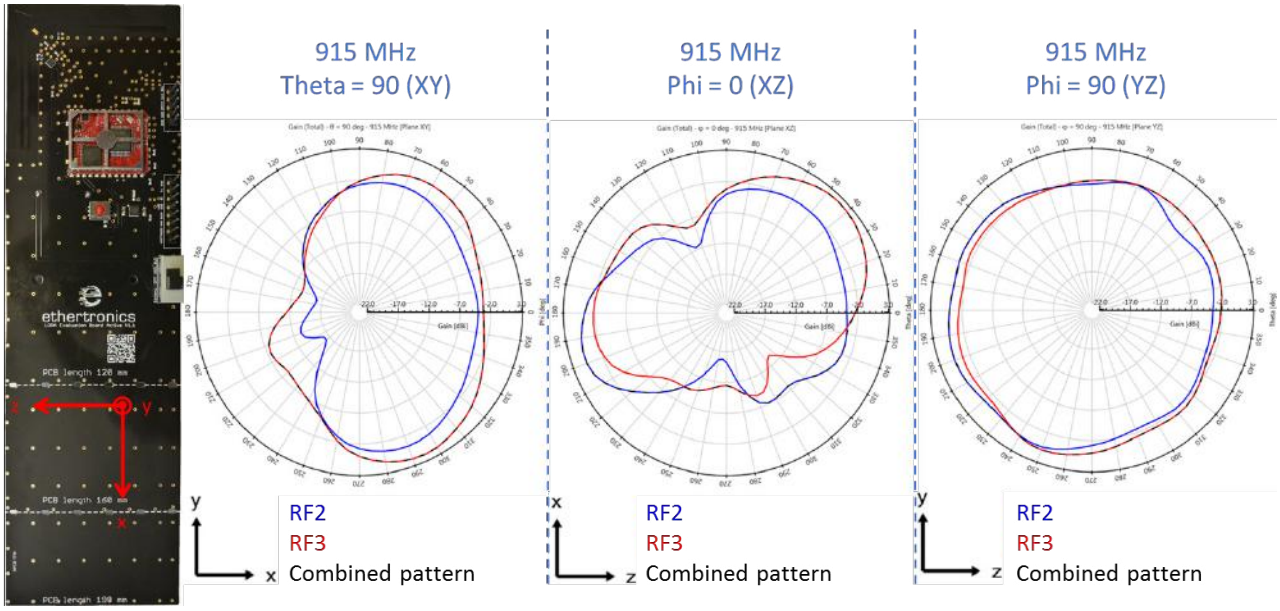

Figure 14

ACTIVE STEERING BENEFITS (RSSI MEASUREMENTS)

MEASUREMENT POSITION 1 FOR THE RSSI MEASUREMENT

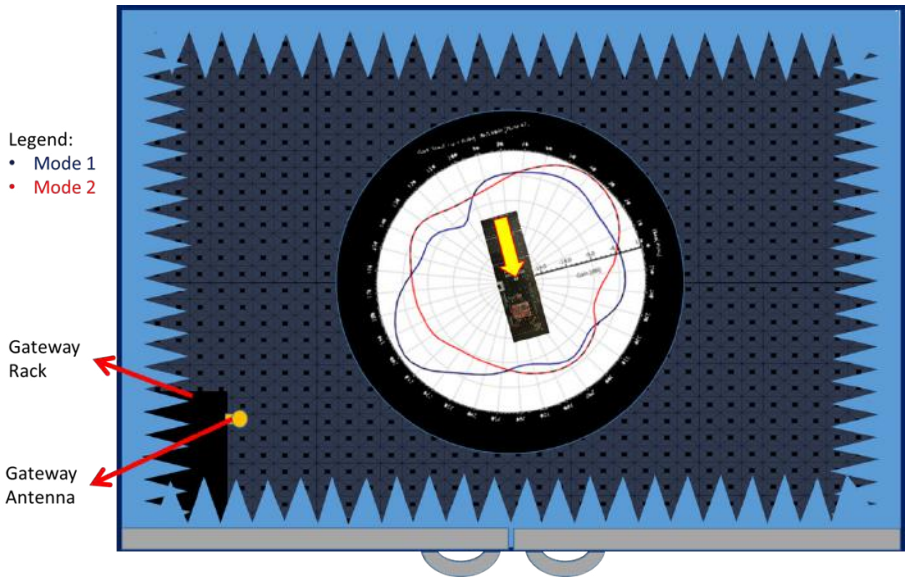

Figure 15

ACTIVE STEERING/MCD MODE VS RSSI IN POSITION 1

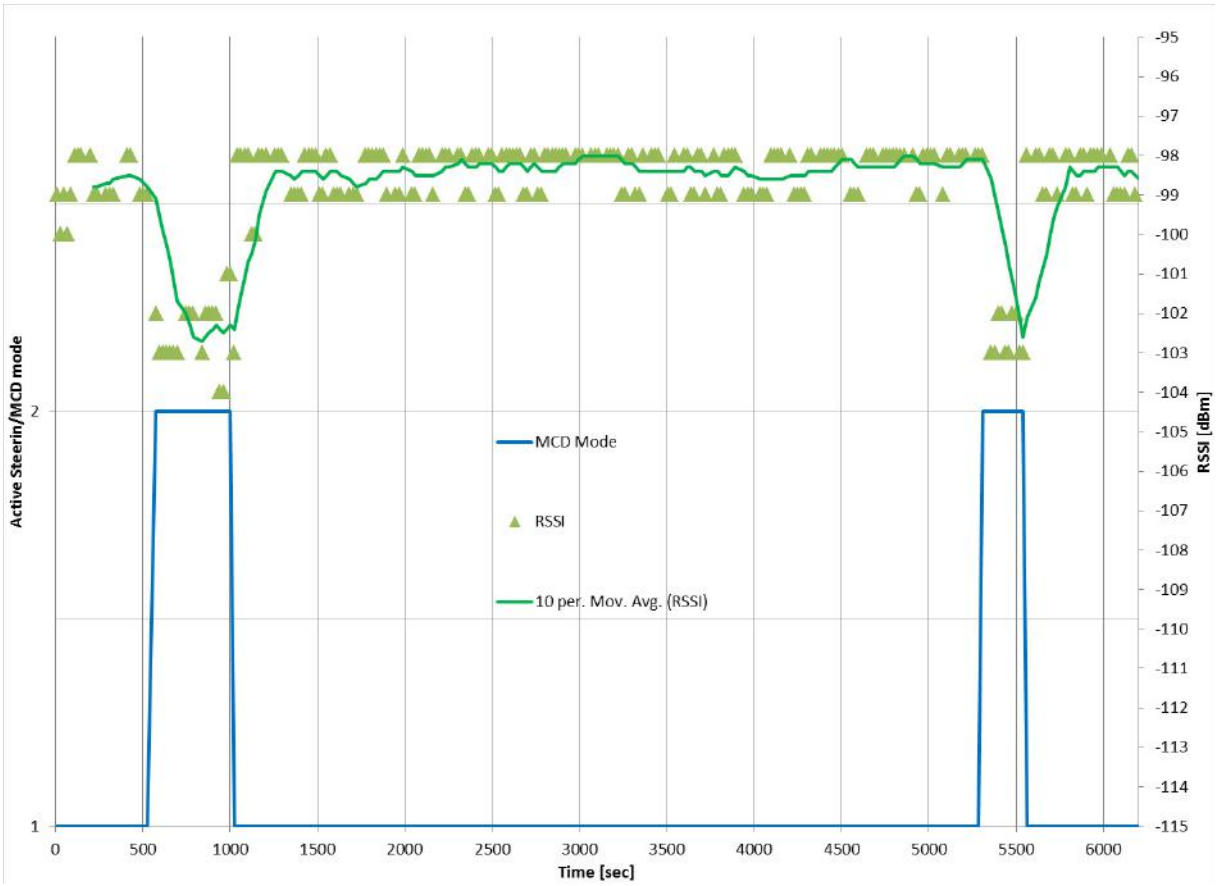

Figure 16

MEASUREMENT POSITION 2 FOR THE RSSI MEASUREMENT

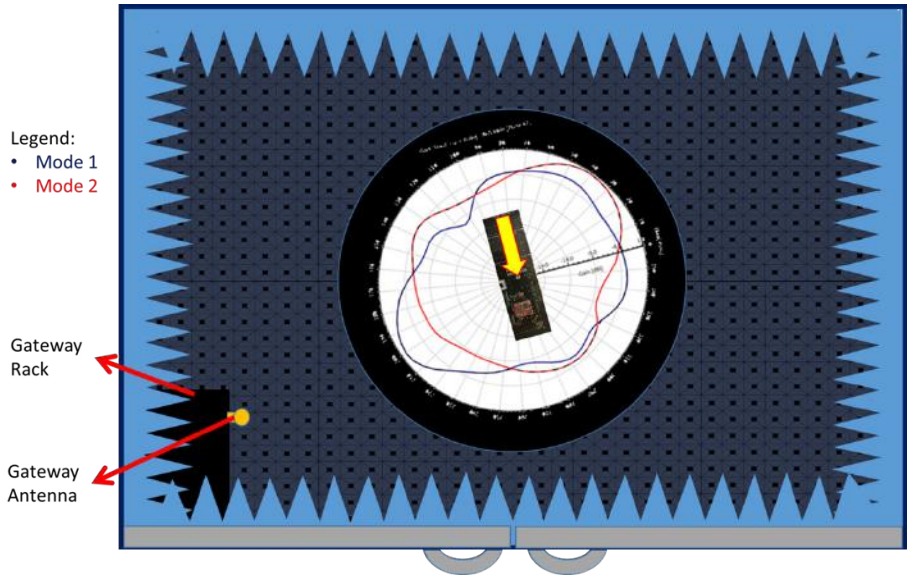

Figure 17

ACTIVE STEERING/MCD MODE VS RSSI IN POSITION 1

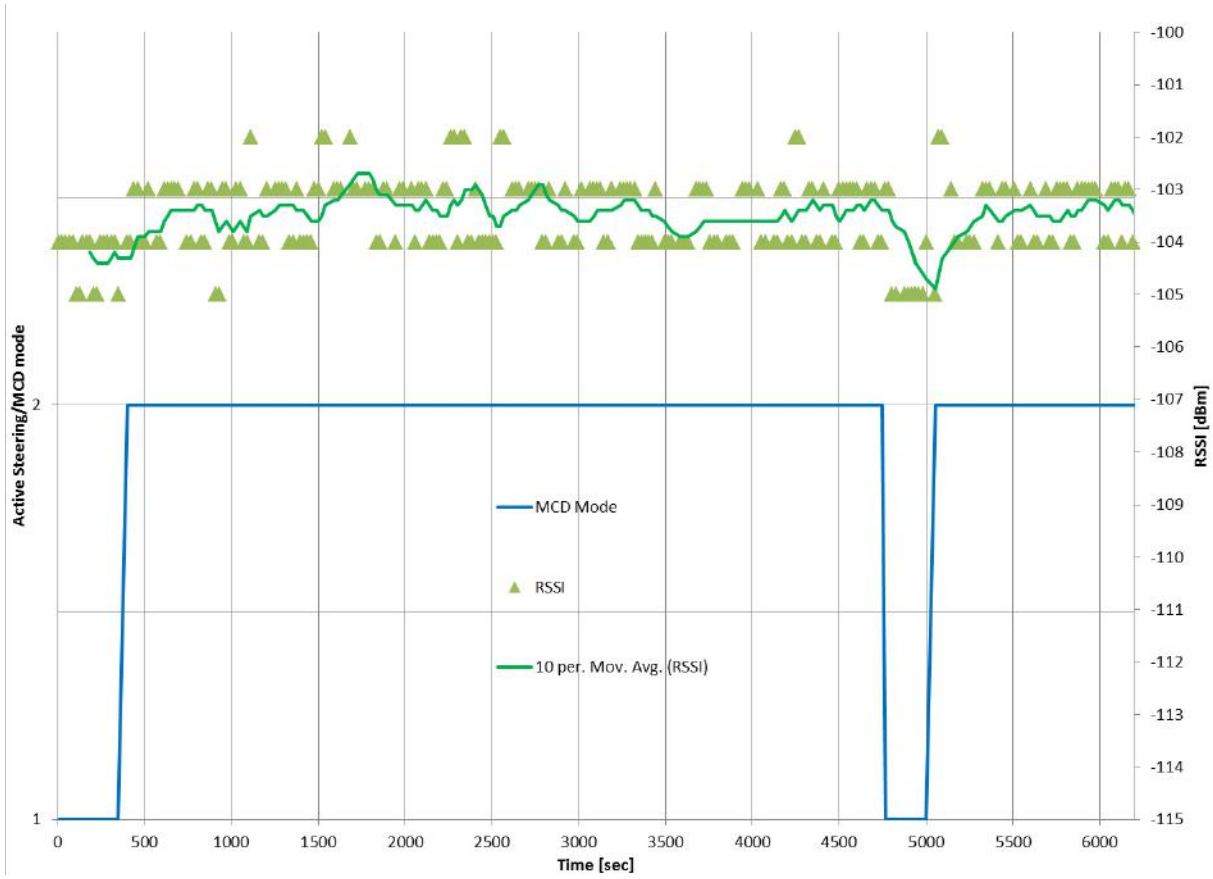

Figure 18

The Figures 15-18 show the benefit of the Active Steering Antenna:

- In Figures 16 and 18 the RSSI values are shown when the Ethertronics Active Evaluation Board V1.1 is measured in the positions shown in the Figures 15 and 17 respectively.
- It can be seen that in each position, one mode is better than the other one.
- In each position, the module (running the Ethertronics MCD algorithm) selects the best state after a training period.
- In the figures 16 and 18 it can be observed that the MCD algorithm converged to the best mode, which has the highest gain towards the gateway antenna, in both positions.

For more comprehensive explanation for the MCD algorithm and the way the measurements were done, please refer to application note LoRa_Module_Application_Note_5-Active-Steering-MCD-Algorithm (example) from www.avx.com/products/modules/lora-module.

AT-COMMANDS

To control the Ethertronics LoRa module with AT-commands, please refer to the document LoRa_Module_AT Command Reference Guide from www.avx.com/products/modules/lora-module for details.

LIST OF FIGURES

LIST OF TABLES

ethertronics®

AN AVX GROUP COMPANY

Americas
+(1) 858.550.3820
eth.usasales@avx.com

Europe
+33 (0) 4 93 74 30 71
eth.europesales@avx.com

Asia
Korea: 82.31.436.2290
China: 886.2.2655.7966

FOLLOW US:

VISIT US AT WWW.AVX.COM