TECHNICAL PAPER

The Feedthrough Varistor — A New Weapon Against EMI

KYOCERA AVX

THE FEEDTHROUGH VARISTOR
A NEW WEAPON AGAINST EMI

AVX has announced the availability of the TransFeed range of multiplayer feedthrough varistors (MLVF), offering circuit designers a very powerful yet compact and inexpensive new weapon to combat both EMI/RFI and transient strikes. While the TransFeed is actually a combination of two existing component technologies, viz, the multiplayer varistor (MLV) and SMT feedthrough filter capacitors, the resulting performance is better than that of these components used separately, largely because of the greatly reduced parallel inductance. To understand why this should be the case, it is necessary to consider how the feedthrough filter and the MLV function separately.

Feedthrough Filter Capacitor

A standard ceramic chip capacitor has a parasitic inductance (Lp) of approximately 1nH. This Lp reduces the self-resonant frequency of the capacitor and therefore the frequency range over which it is effective as an EMI filter (Figure 1a).

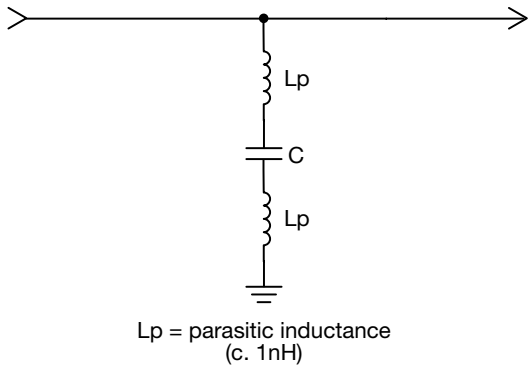

Figure 1a. Ceramic Capacitor Model

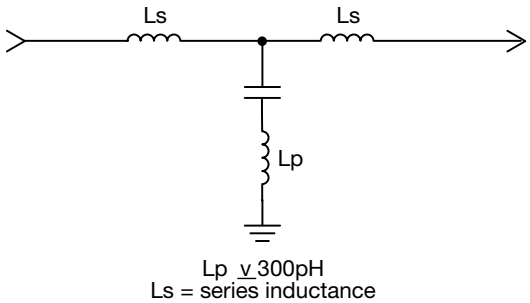

Figure 1b. Feedthrough Capacitor Model

By a special arrangement of its electrodes and terminations, the feedthrough filter capacitor effectively transforms around 70% of this detrimental shunt inductance into series inductance, where it forms a 'T' filter with the capacitor (Figure 1b). The effects of introducing the series inductance Ls and reducing the shunt inductance Lp are:

a) A significant increase in the SRF value, and
b) A broadening and deepening in the S21 curve, thereby greatly improving the devices usefulness as a noise filter.

In fact, by creating the 'T' structure, it is possible to obtain very useful EMI filtering even beyond the (already improved) SRF.

Multilayer Varistor (MLV)

The MLV, as typified by AVX's TransGuard family, has become the designers' choice for protection from transients such as ESD (Electrostatic Discharge), EFT or "Burst", surge and inductively generated impulses from relays, motors, etc. The main reasons for the MLVs popularity are:

- Very small size, from 1210 down to 0402
- Exceptional reliability
- Fast response time of c.300 psecs
- Low cost
- Optional capacitance values including very low for high speed data line and antenna protection

The MLV consists of layer of doped zinc oxide (Zn0) separated by metallic electrodes and, in fact, looks identical in construction to a chip ceramic capacitor. When the device is fired at high temperature, a diffusion of the dopants occurs and every grain of ceramic (millions, even in the smallest chip) is converted into a Schottky junction, i.e., the MLV becomes a mass of P-N junctions all packed into a series/parallel configuration. When transient strike occurs, all of these "ceramic diodes" go into conduction and dissipate energy, which is why the energy density of MLV's is so high when compared to single junction, diode based products (Figure 2, MLV Model). Response time of transient voltage suppressors is critical where protection from very fast transients such as ESD and Burst is required. The response time (Tr) of the MLV is largely determined by its shunt parasitic inductance.

The Feedthrough Varistor (Figure 3, MLVF Model)

We can now see why the combination of MLV material and feedthrough construction is so beneficial. If the Tr of an MLV is strongly dependent upon its shunt inductance, and if the feedthrough format reduces this Lp by some 70%, we should logically expect the response time of the MLV to be greatly improved, and so it proved to be in practice.

Testing has shown that the maximum voltage appearing across the feedthrough varistor at clamping was only 35% of that experienced by a conventional MLV when hit with an 8kV ESD waveform per IEC-1000-4. This coincides almost exactly with the improvement predicted theoretically, i.e., a response time approaching 100psec.

For EMI/RFI suppression purposes, it is also worth noticing that the Zn0 material used in the TransFeed (MLVF) is more "lossey" that the barium titanate of ceramic capacitors. This helps to produce exceptional noise attenuation figures of -50db to -60db+ at SRFs vs. the -30db seen with a standard capacitor.

The AVX TransFeed range features working voltages from 5.6V to 18V with feedthrough currents of 500mA to 1A, all contained within an 0805 outline chip.

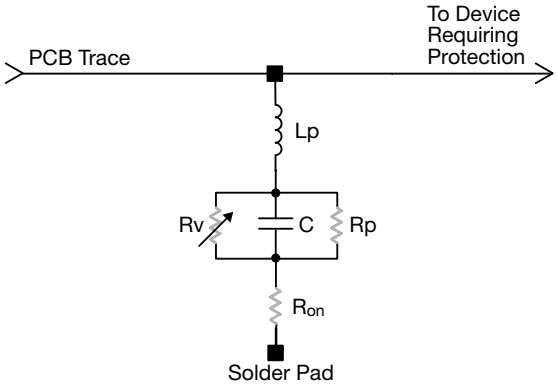

Figure 2.

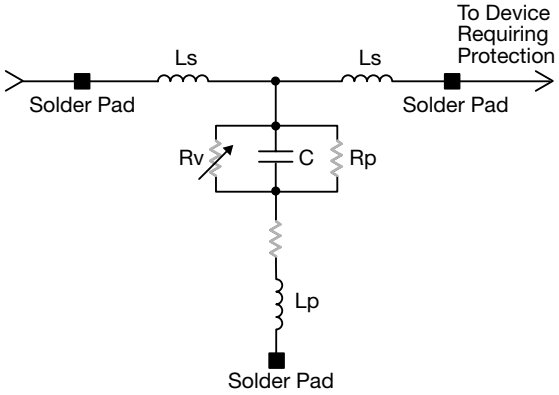

Figure 3.

NORTH AMERICA
Tel: +1 864-967-2150

ASIA
Tel: +65 6286-7555

CENTRAL AMERICA
Tel: +55 11-46881960

EUROPE
Tel: +44 1276-697000

JAPAN
Tel: +81 740-321250

WWW.KYOCERA-AVX.COM